VOLTAGE FEEDBACK

BJT DC BIASING

prepared by:

Gyro A. Madrona

Electronics Engineer

GRADING SYSTEM

FINAL GRADE

30%

PRELIM

30%

MIDTERM

40%

ENDTERM

TERM GRADE

50%

WEEKLY

50%

EXAM

100%

LABORATORY

PENALTY

0

ABSENT

3

45-min LATE

7 max

15-min LATE

TOPIC OUTLINE

DC Bias with Voltage Feedback

- Base-Emitter Loop
- Collector-Emitter Loop
- Load Line Analysis

DC BIAS WITH VOLTAGE FEEDBACK

BASE-EMITTER LOOP

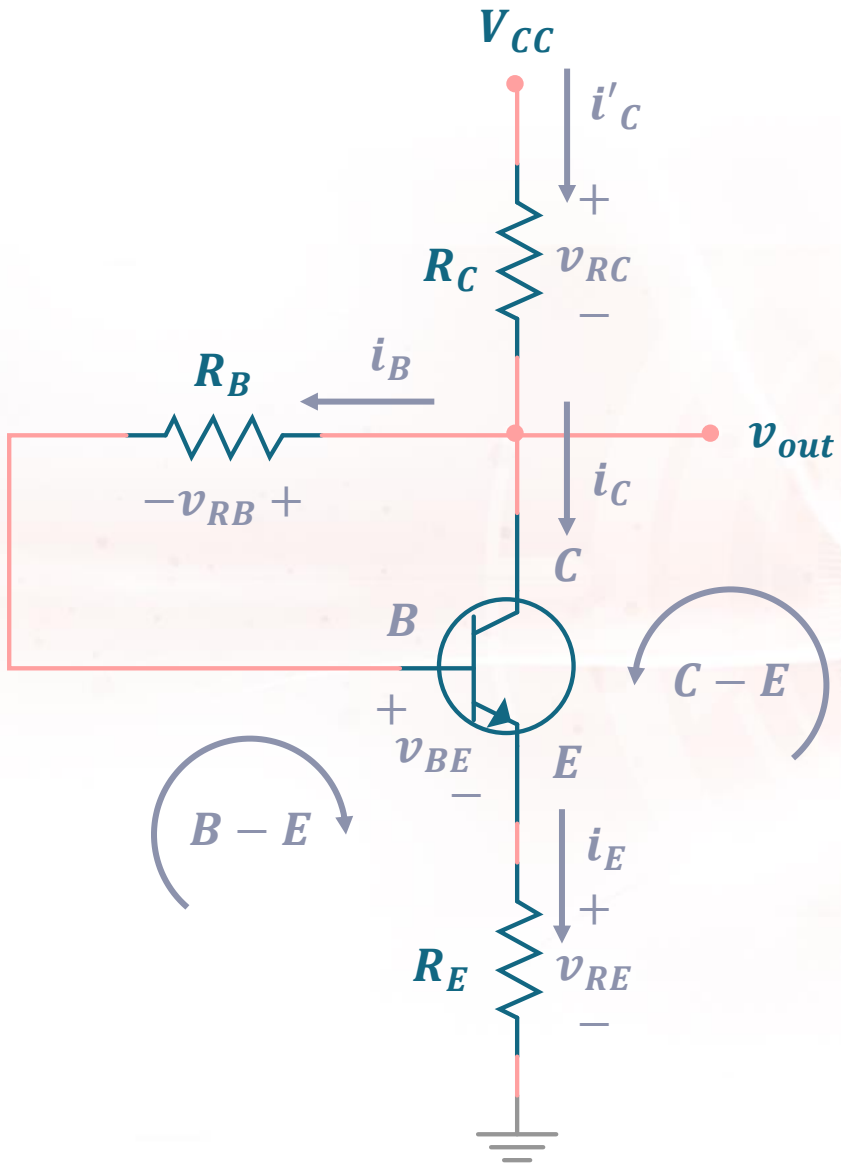

KVL @$B-E$

$$-v_{CC}+v_{RC}+v_{RB}+v_{BE}+v_{RE}=0$$

$$v_{RC}+v_{RB}+v_{RE}=v_{CC}-v_{BE}$$

$$i'_C R_C+i_B R_B+i_E R_E=v_{CC}-v_{BE}$$

Let $i'_C \approx i_C$

$$\beta i_B R_C+i_B R_B+i_B(\beta+1)R_E=v_{CC}-v_{BE}$$

$$i_B(\beta R_C+R_B+\beta R_E)=v_{CC}-v_{BE}$$

$$i_B=\frac{v_{CC}-v_{BE}}{R_B+\beta(R_C+R_E)}$$

COLLECTOR-EMITTER LOOP

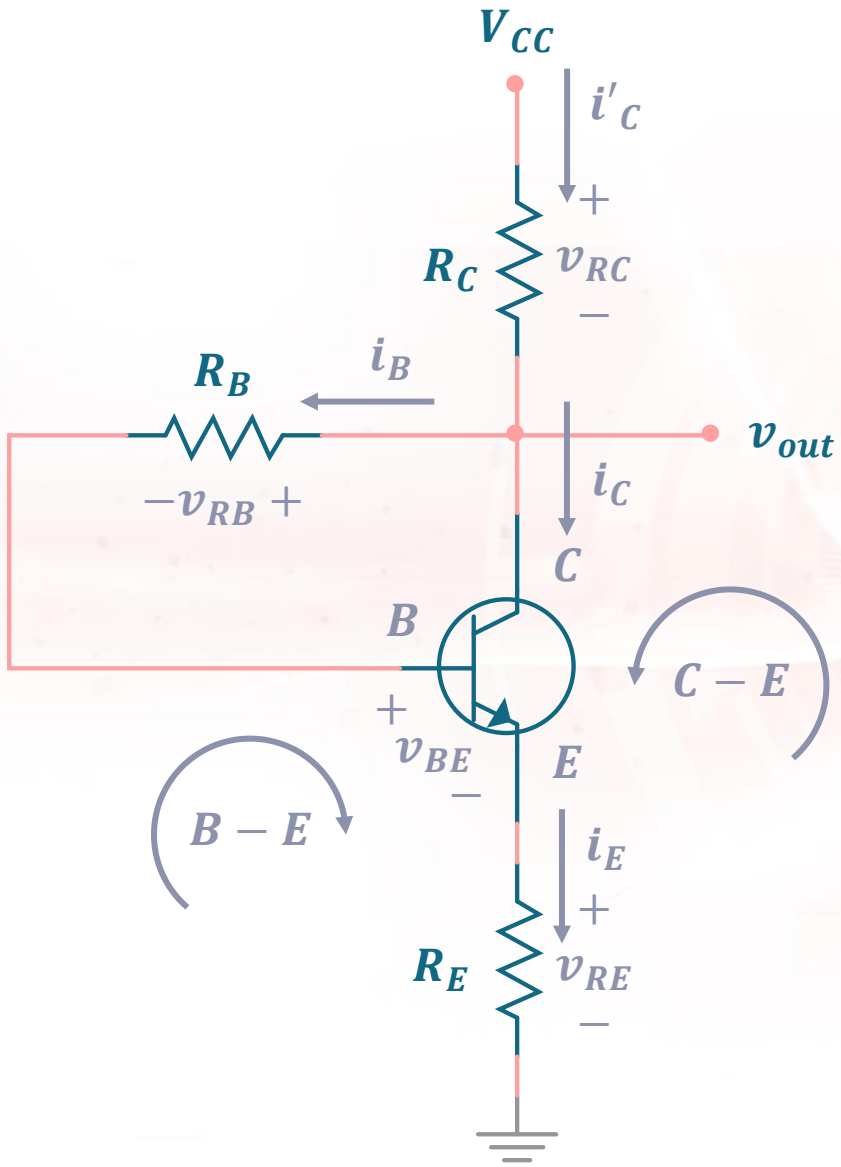

KVL @$C - E$

$$-v_{CC} + v_{RC} + v_{CE} + v_{RE} = 0$$

$$v_{CE} = v_{CC} - v_{RC} - v_{RE}$$

$$v_{CE} = v_{CC} - i'_C R_C - i_E R_E$$

Let $i'_C \approx i_C$; $i_C \approx i_E$

$$v_{CE} = v_{CC} - i_C(R_C + R_E)$$

Determine the quiescent level of i_{CQ} and v_{CEQ} for the given network.

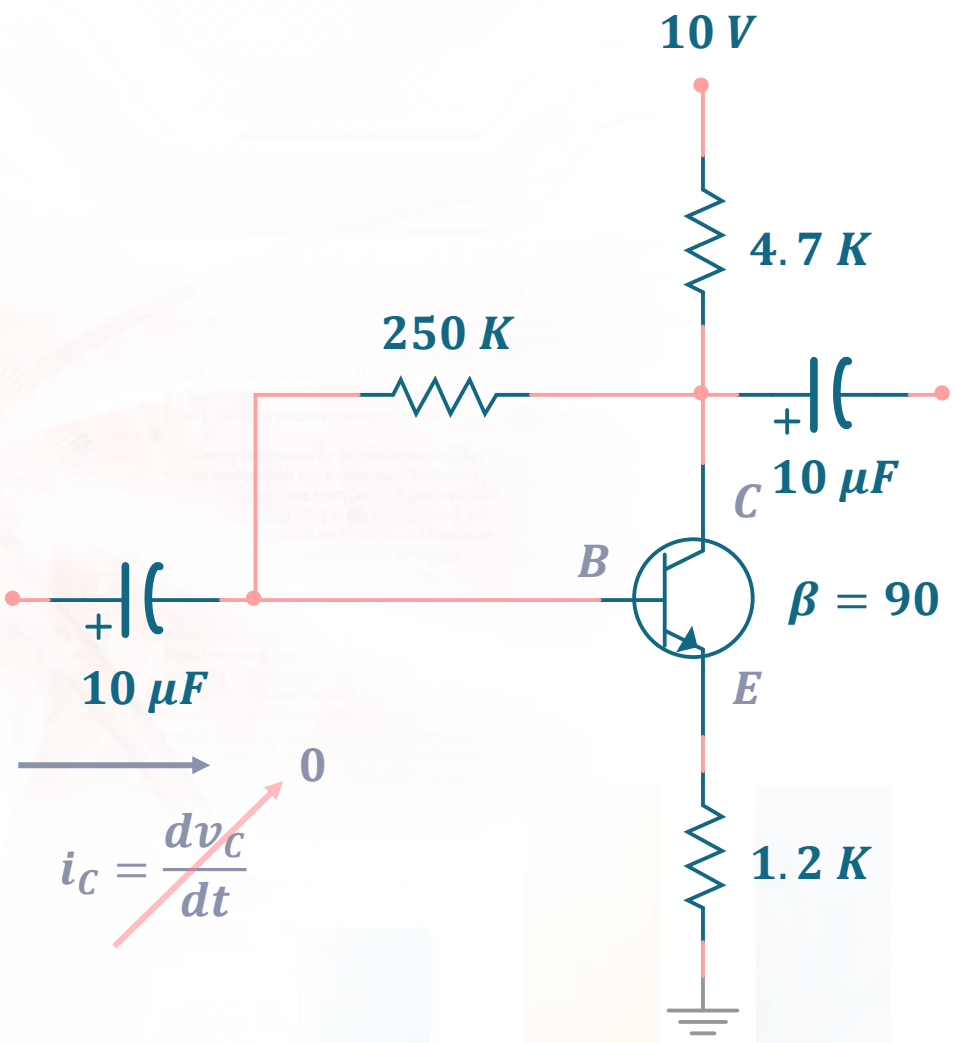

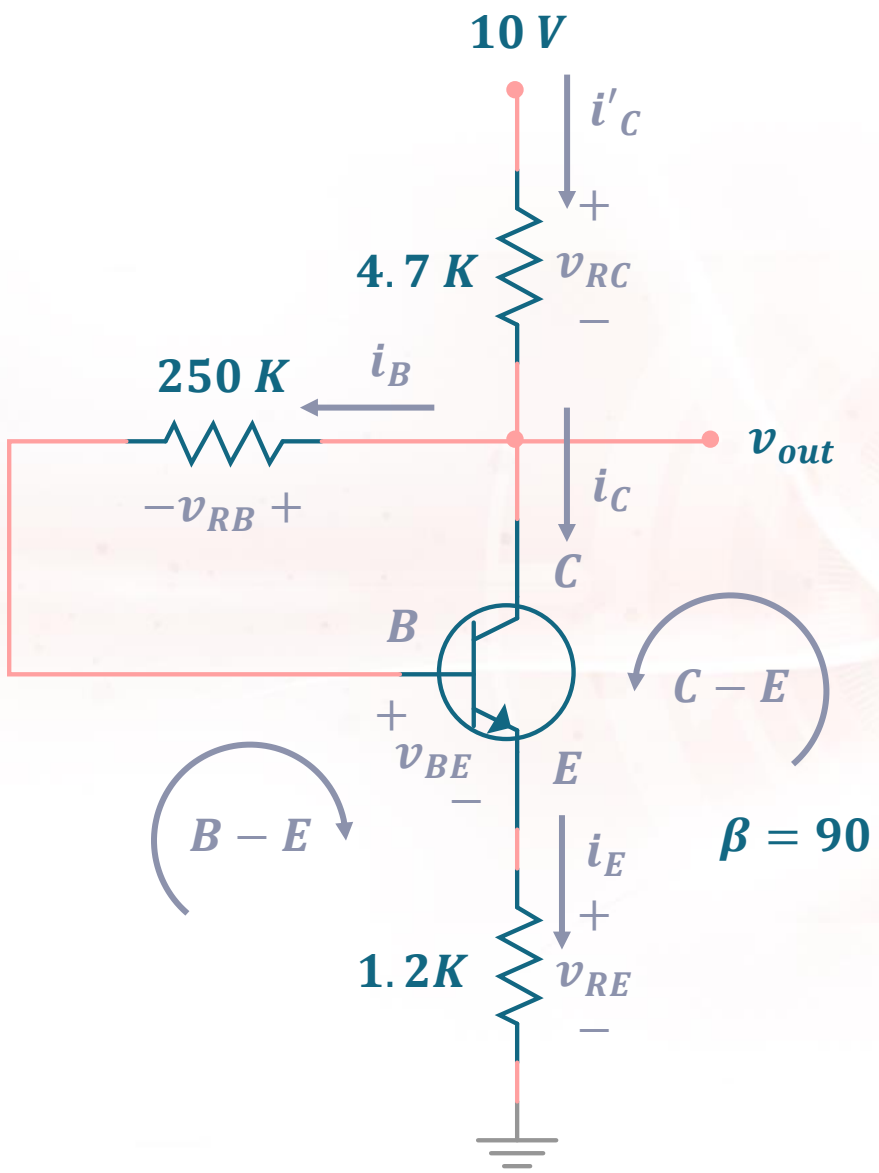

KVL @$B - E$

$$-v_{CC} + v_{RC} + v_{RB} + v_{BE} + v_{RE} = 0$$

$$v_{RC} + v_{RB} + v_{RE} = v_{CC} - v_{BE}$$

$$i'_C R_C + i_B R_B + i_E R_E = v_{CC} - v_{BE}$$

Let $i'_C \approx i_C$

$$\beta i_B R_C + i_B R_B + i_B(\beta + 1)R_E = v_{CC} - v_{BE}$$

$$i_B(\beta R_C + R_B + \beta R_E) = v_{CC} - v_{BE}$$

$$i_B = \frac{10 - 0.7}{250K + 90(4.7K + 1.2K)}$$

$$i_B = 11.91\ \mu A$$

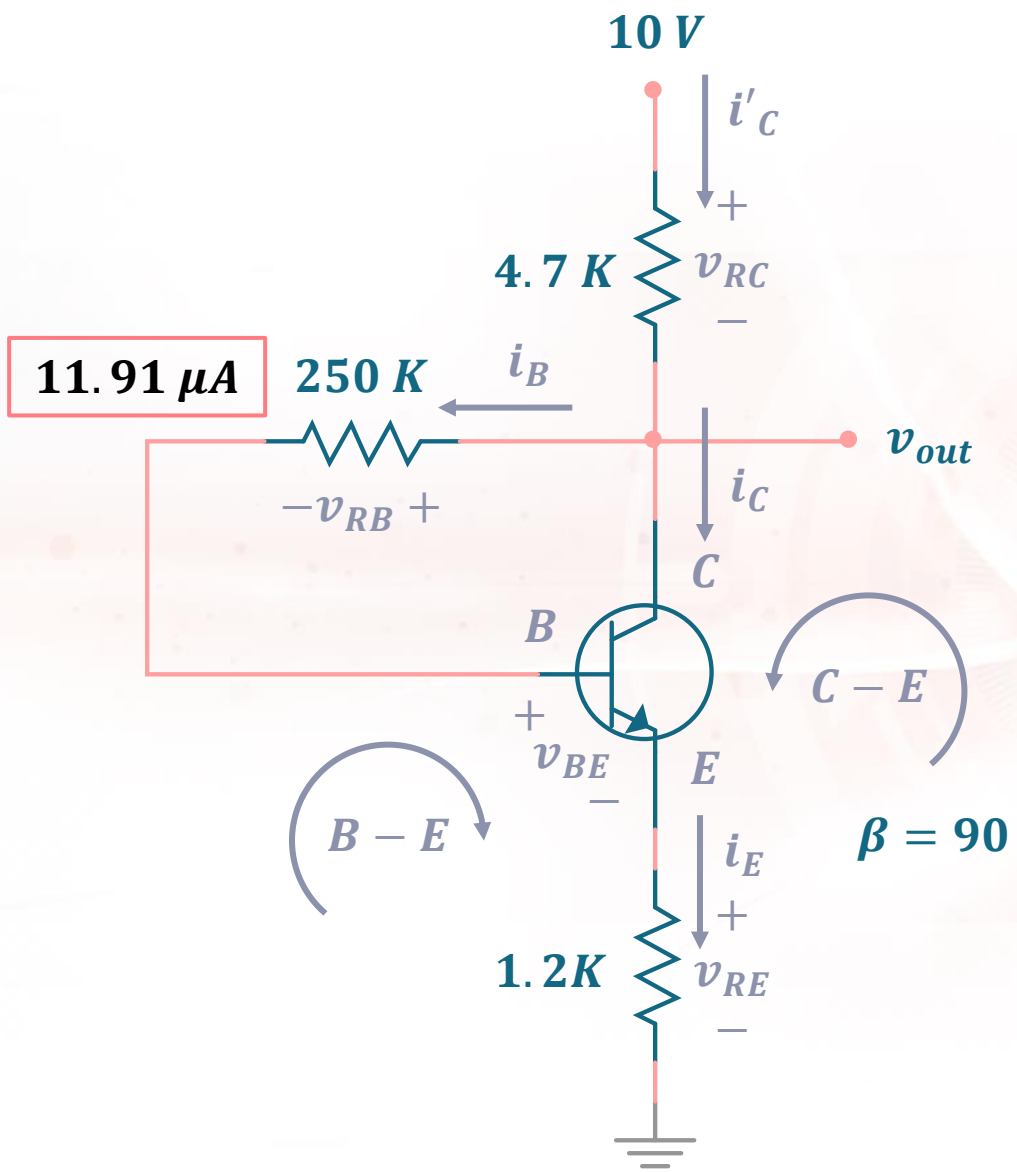

Current Gain

$$i_C = \beta i_B$$

$$i_C = 90(11.91\ uA)$$

$$\boxed{i_{CQ} = 1.07\ mA}$$

ans

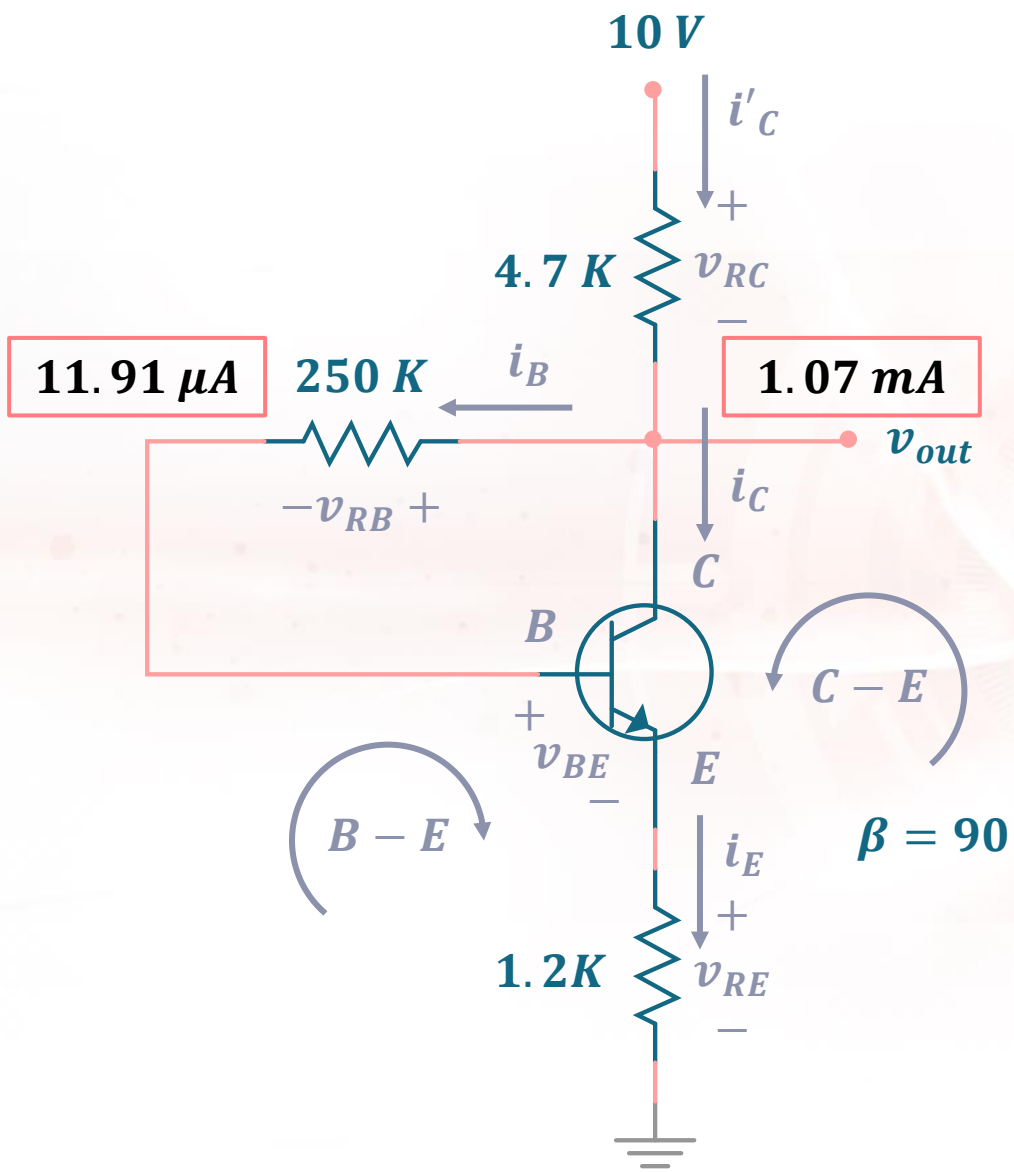

KVL @$C-E$

$$-v_{CC} + v_{RC} + v_{CE} + v_{RE} = 0$$

$$v_{CE} = v_{CC} - v_{RC} - v_{RE}$$

$$v_{CE} = v_{CC} - i'_C R_C - i_E R_E$$

Let $i'_C \approx i_C$; $i_C \approx i_E$

$$v_{CE} = v_{CC} - i_C(R_C + R_E)$$

$$v_{CE} = 10 - 1.07mA(4.7K + 1.2K)$$

$$\boxed{v_{CEQ} = 3.69\,V}$$

ans

LABORATORY